HSF

NOTES:
Current Rating: 3.0AMP
Contact Resistance: 20mΩ Max
Withstand Voltage: 1000V AC/DC
Insulation Resistance: 1000MΩ Min
Operation Temperature: −40℃ to +105℃

Contact Material:Phosphor Bronze
Contact plating:Au Or Sn over Ni
Insulator Material:PA9T+30%G.F UL94V−0

Recommended P.C.B Layout(Top Side)
(PCB BOARD TOLERANCE±0.05)

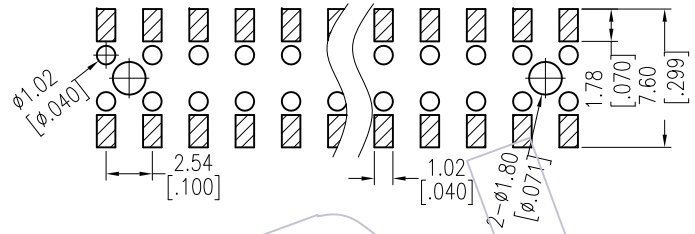

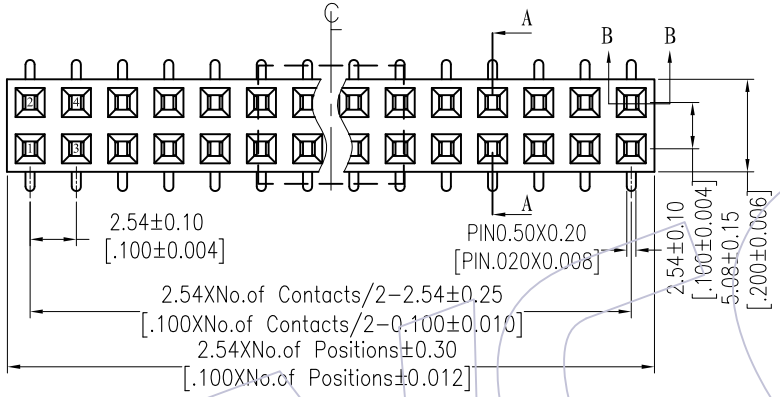

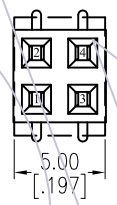

Special CAP for 2*2P−2*4P

Ordering Information

2135 - 2 XX M XX CUN X X

- No.of Pins per ROW:02~40PIN
- Contact Plating:
  G0=Gold Flash
  G3=10μ"Gold
  G4=15μ"Gold
  G5=30μ"Gold
  S0=Gold Flash/Tin
  S3=10μ"Gold/Tin
  S4=15μ"Gold/Tin
  S5=30μ"Gold/Tin
  SN=Tin
  SM=Matte Tin
- Packing:
  T=Tube
  P=Tube+CAP
  R=Tape&Reel+CAP
- Series No.
  1=TYPE 1
  2=TYPE 2

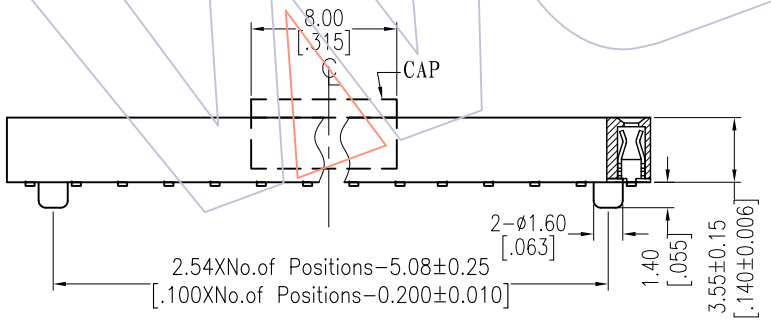

SECTION B−B

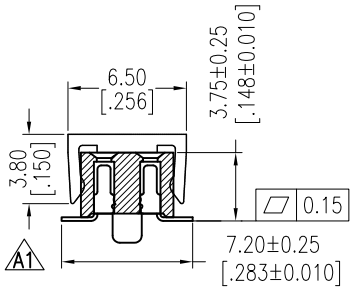

TYPE 2 WITH POST

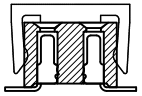

TYPE 1 W/O POST

Item	Pitch	Mating
Standard	2.54	1115/1120/1125
Alternate		

TITLE	PART NO.
TYPE 1	2135−2XXMXXCUNX1
TYPE 2	2135−2XXMXXCUNX2

REV	DATE	MODIFICATION DESCRIPTION	CHANGE
A1	13/06/17	Modify CAP 4.30 → 3.80	------
A0	12/08/02	NEW	------

OPERATION	
X.X	±0.40
X.XX	±0.25
X.XXX	±0.15
Angle	± 3°
DIM	TOL

DRAW Wang	DATE 2013/06/17	SCALE	FIT	PART NO. SEE TABLE	WCON Http: www.wcon.com
CHECK	DATE	UNIT	mm	TITLE: FH2.54mm DUAL ROW 180° SMT H=3.50	
		SIZE	A4		
APPROVE	DATE	SHEET	1/1	Customer NO.	
		PROJ.			

WCON−Dongguan
Tel: +86 769 85358920
Fax: +86 769 85358915
E-mail: sales@wcon.com

WCON−Kunshan
Tel: +86 512 57468408
Fax: +86 512 57468468
E-mail: salesks@wcon.com